UEBE 110 B-Type Varianto
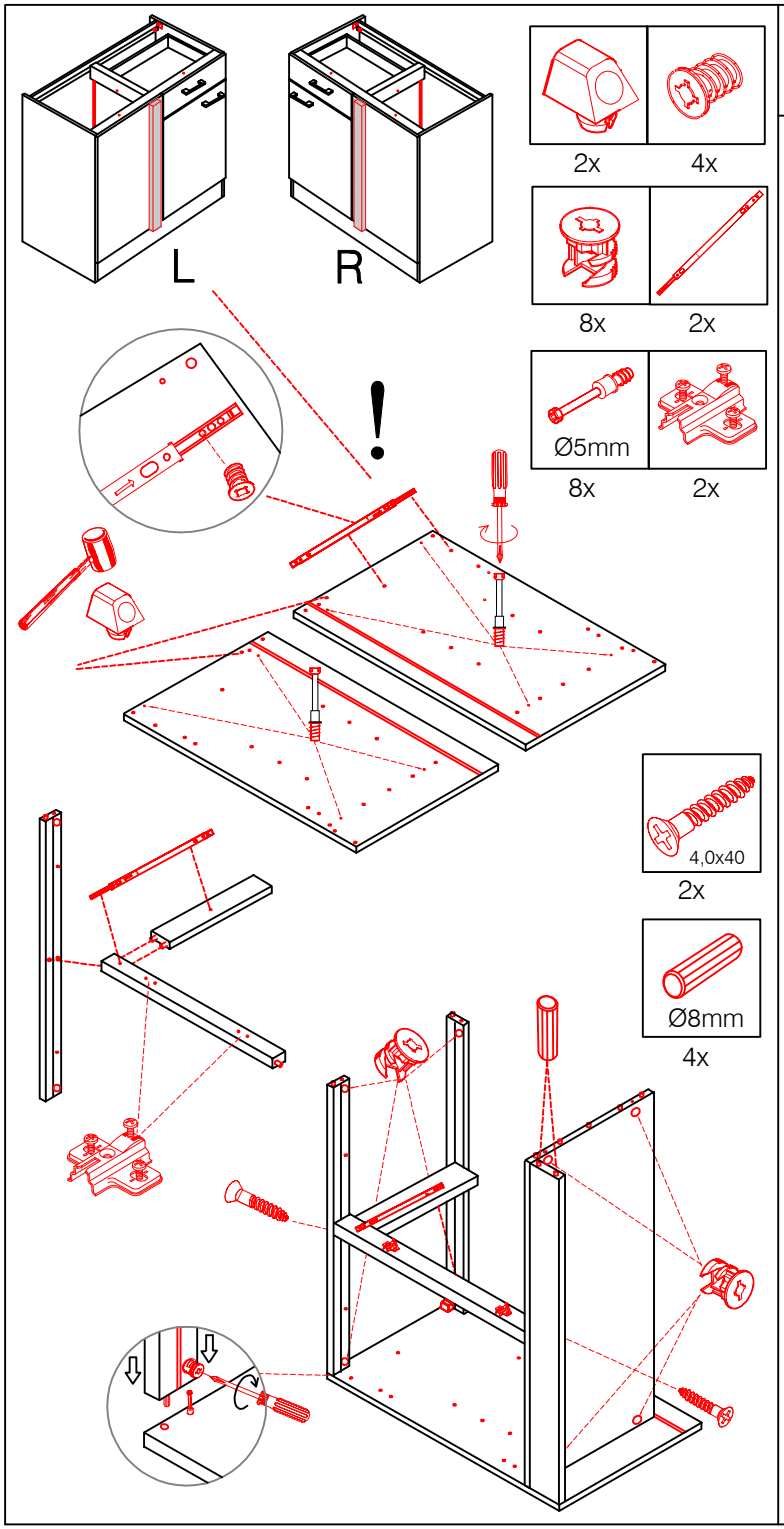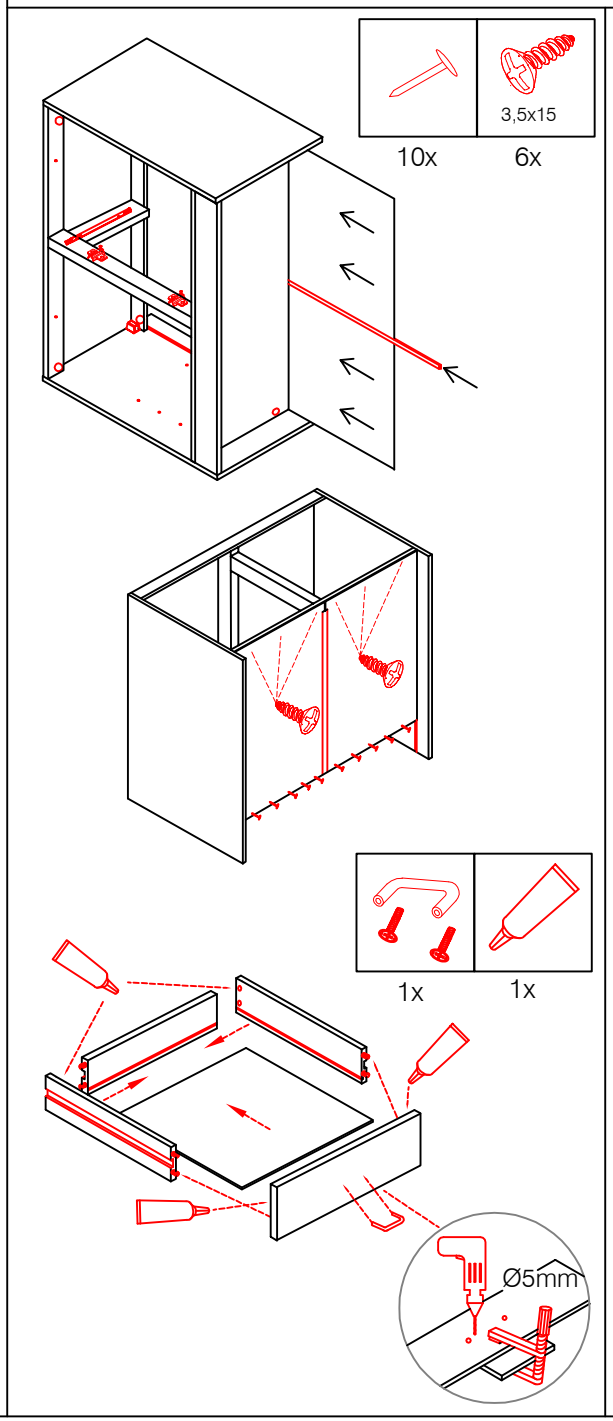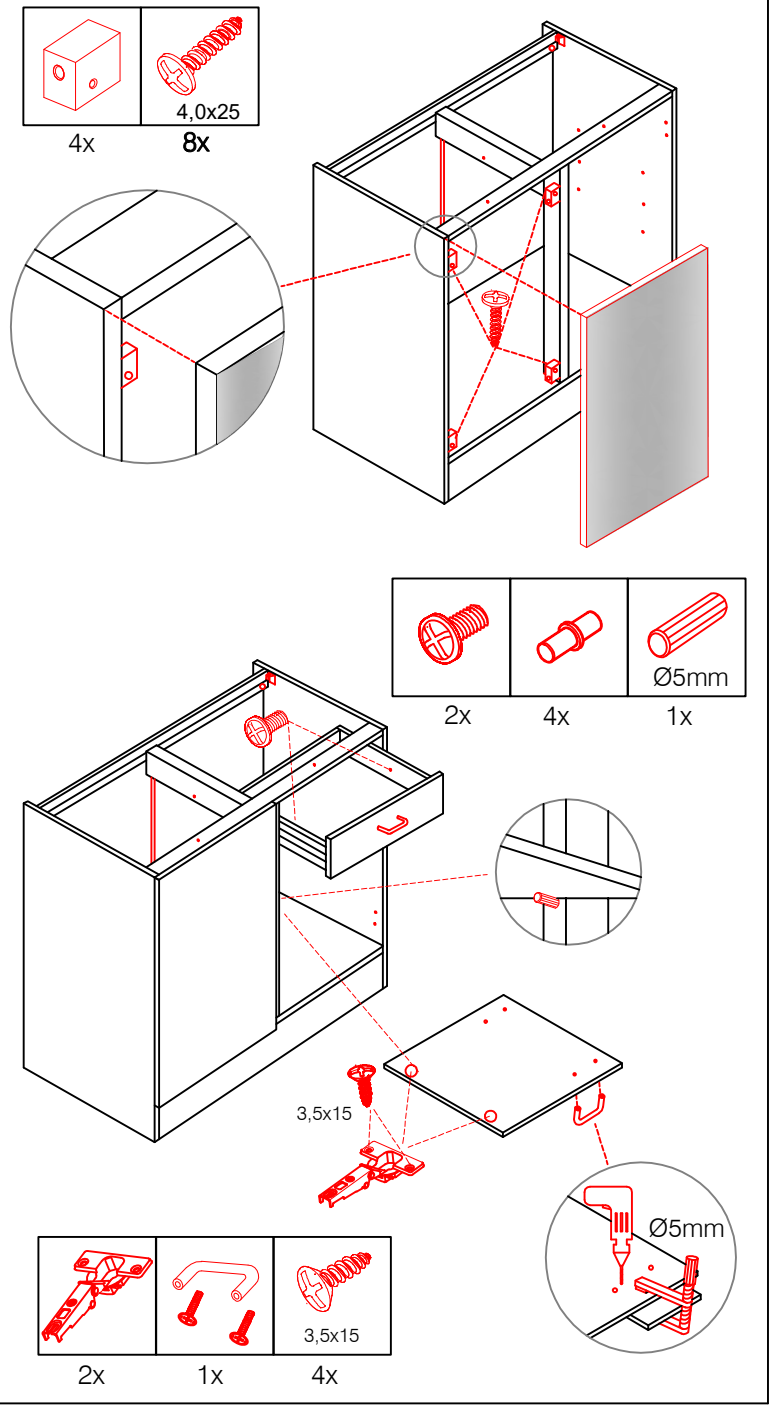
Montageanleitung
Notice de montage
Assembly instruction